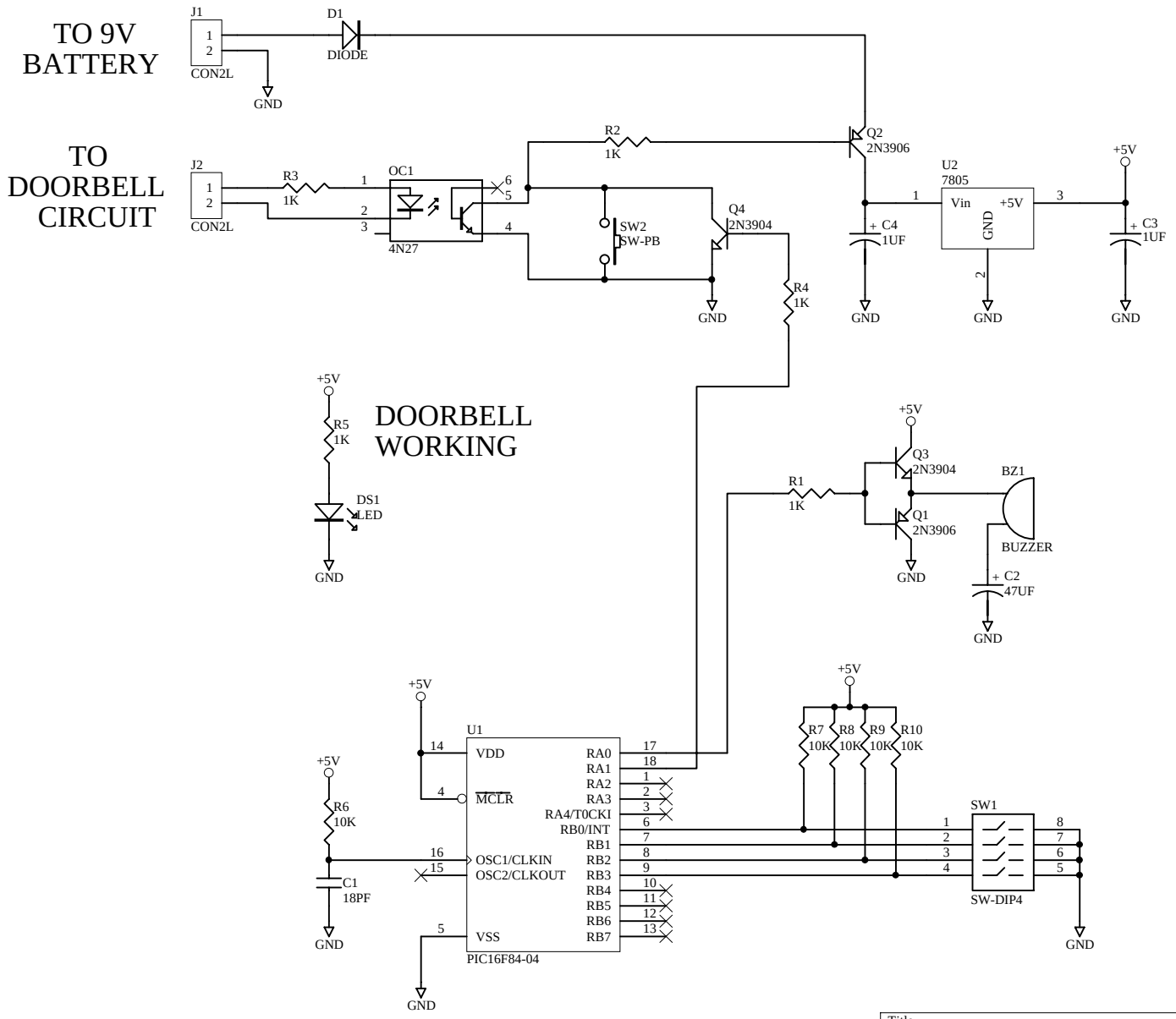

Title	SINGING DOORBELL	
Size: Letter	Number	Revision: 1.0
Date: 14-Dec-2001		Sheet of
File: D:\Projects\Doorbell\Schematics\DOORBELL.DDB		Drawn By: JON KNOLL